Motor Driver Shield v1.1

Technical Manual Rev 1r1

The Motor Driver Shield used to drive two DC motors independently, or one bipolar stepping motor. Up to 16VDC 1.4A per motor output drive. GizDuino/Arduino Compatible.

FEATURES:

- GizDuino/Arduino Compatible
- PWM Current control

GENERAL SPECIFICATION:

- **Supply Input:** Up to 16VDC 1.4 A (per motor output drive)
- **On board IC:** LB11847 PWM
- **PCB Dimension:** 66 mm x 53 mm

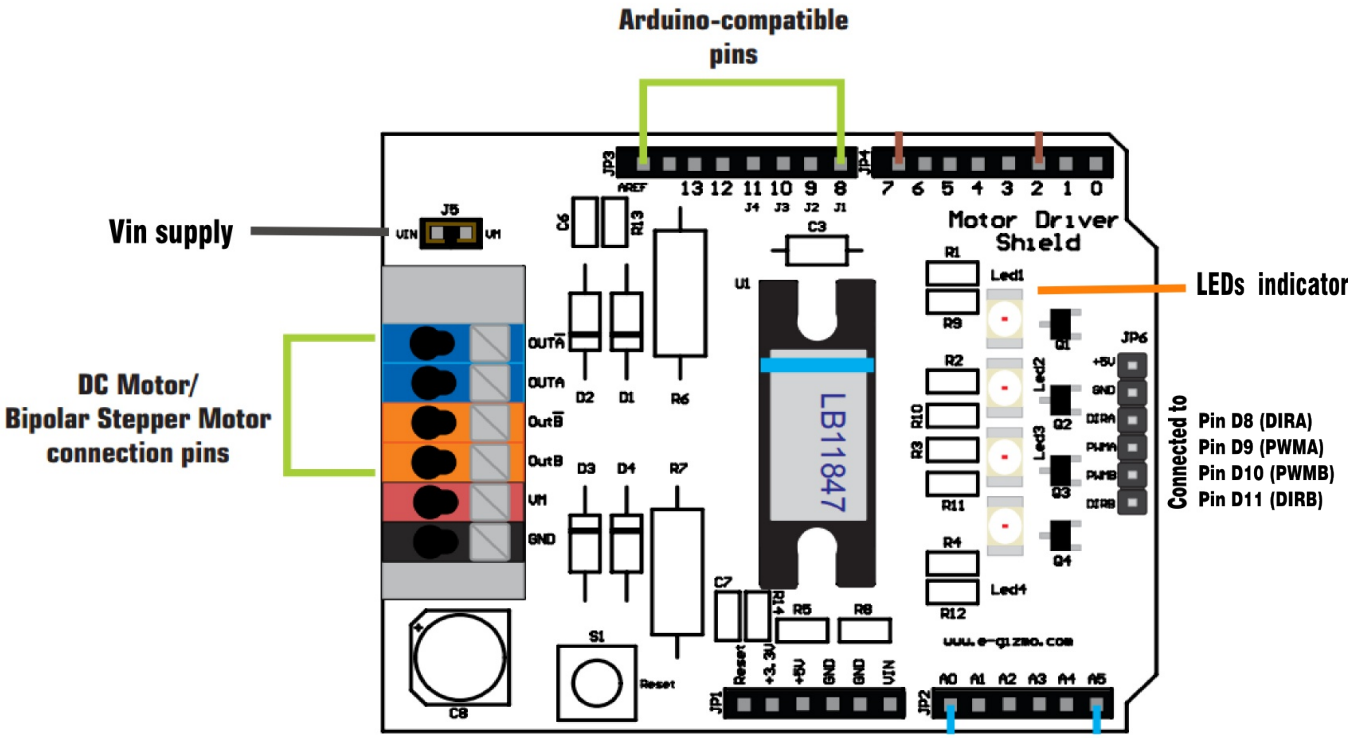

Figure 1. Major parts presentation of e-Gizmo Motor Driver Shield v1.1

Table 1. Motor Driver Shield pins and descriptions

PIN I.D	***DESCRIPTIONS***
VIN (J5)	Voltage Input Supply DC
GND	Ground
OUT A	Motor A Output
OUT A	Motor A Output
OUT B	Motor B Output
OUT B	Motor B Output
Pin 8 (DIRA)	Digital Pin 8 (Direction Control)
Pin 9 (PWMA)	Digital Pin 9 (PWM control)
Pin 10 (PWMB)	Digital Pin 10 (PWM control)
Pin 11 (DIRB)	Digital Pin 11 (Direction Control)

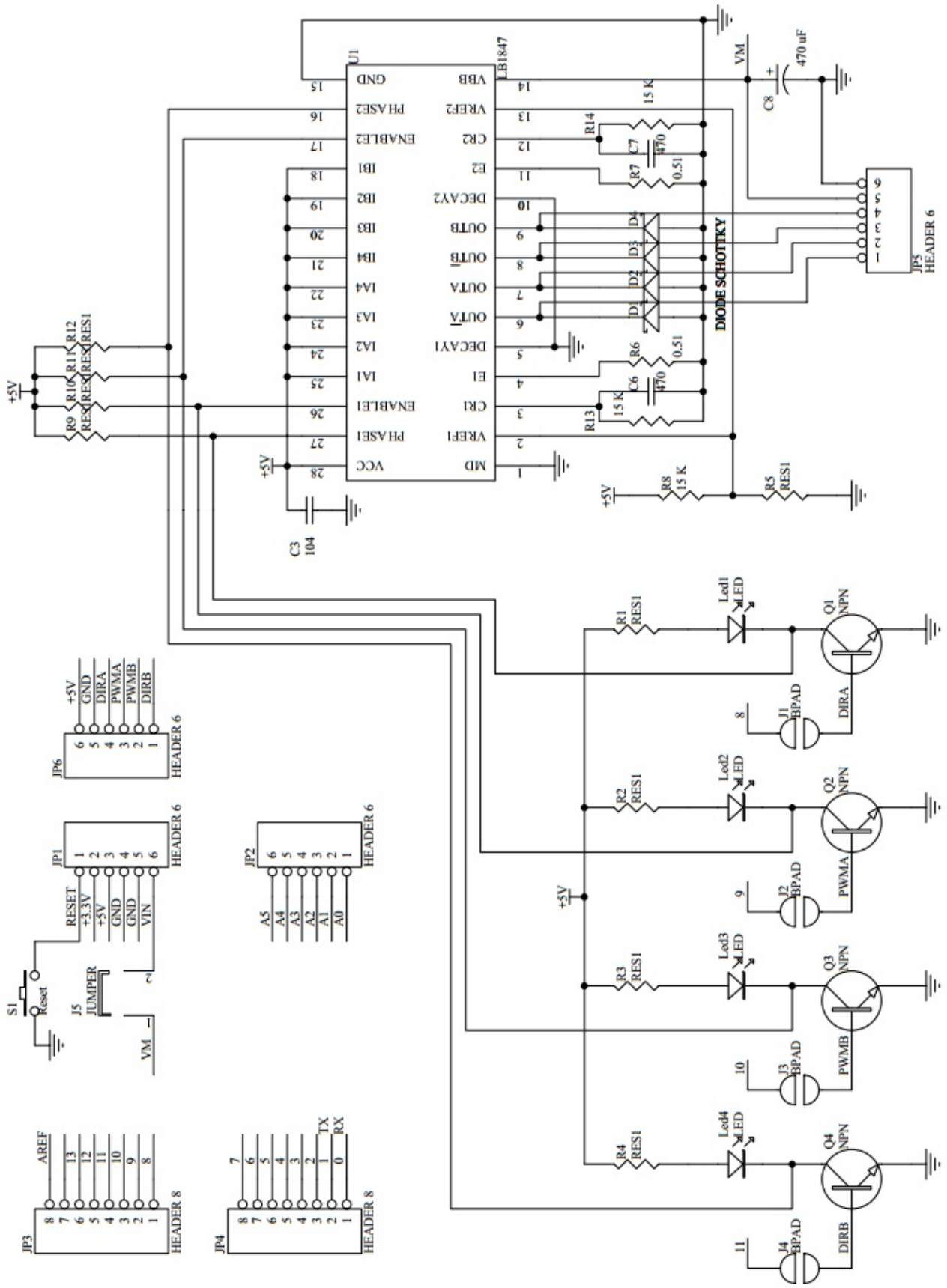

Figure 2. *Schematic Diagram of e-Gizmo Motor Driver Shield v1.1*

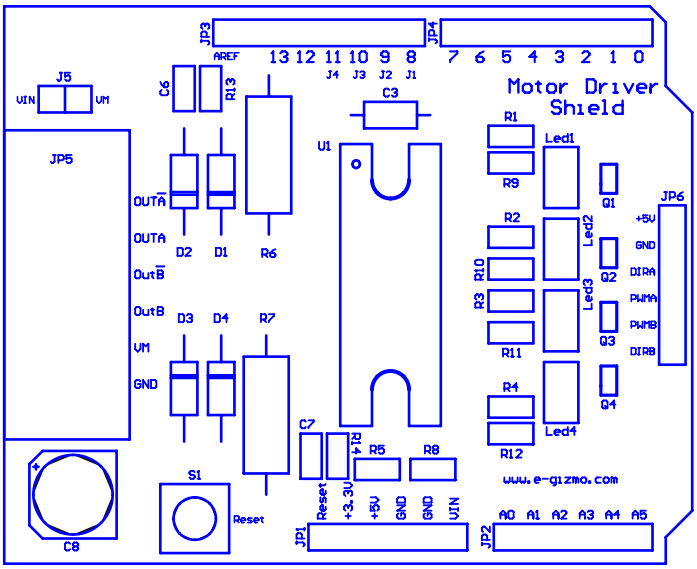

Figure 3. *Parts Placement*

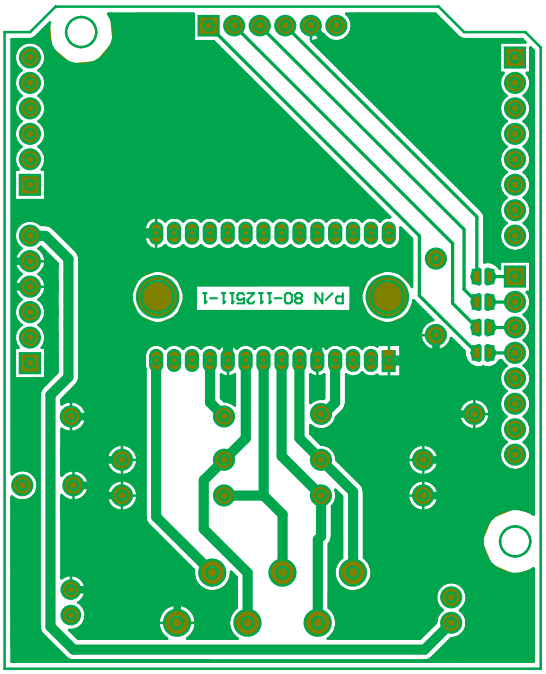

Figure 4. *BottomPCBGuide*

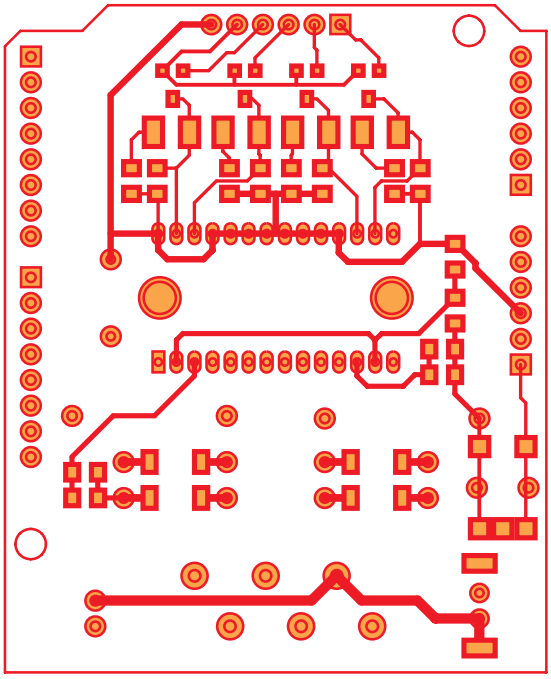

Figure 5. *TopPCBGuide*

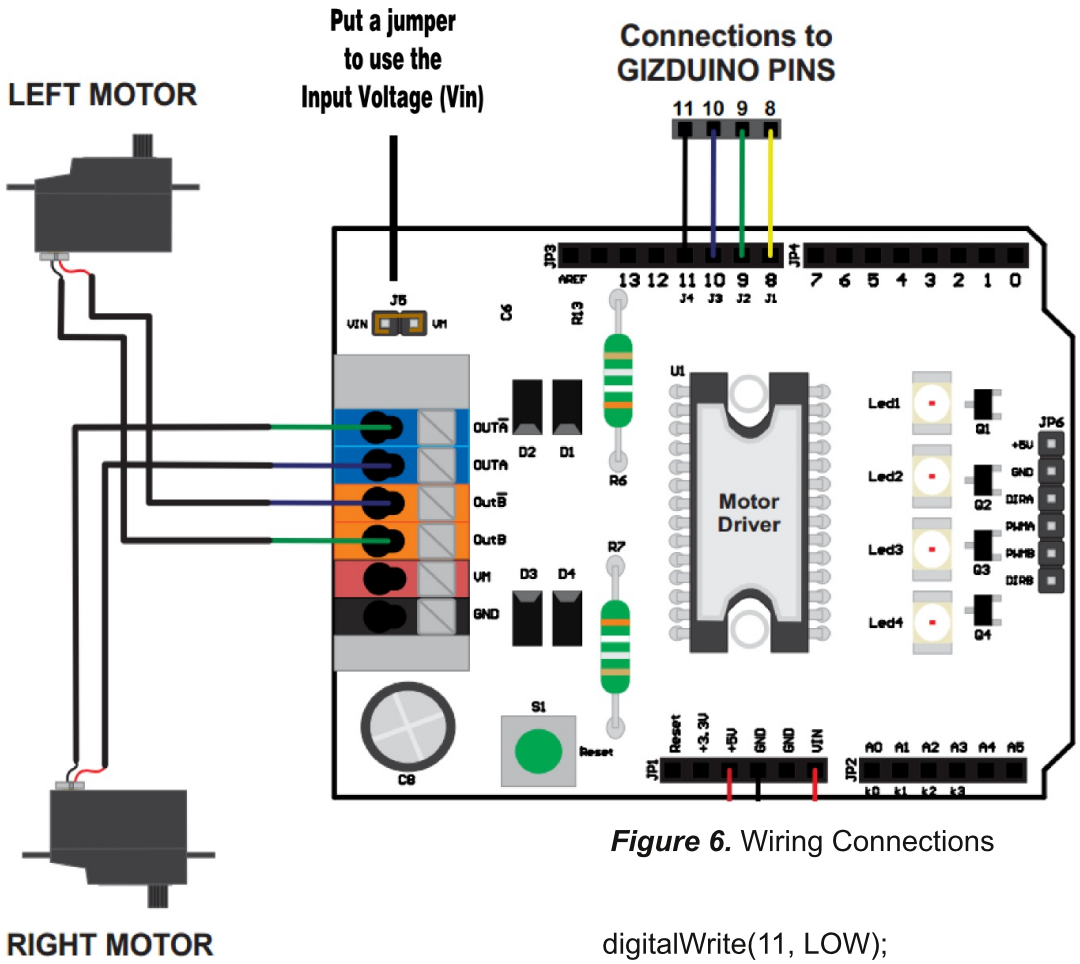

Figure 6. Wiring Connections

```
/*
   e-Gizmo Motor Driver Shield

 Sample codes

 Codes by:
 e-Gizmo Mechatronix Central
 http://www.e-gizmo.com

 */

int speed;

void setup() {
  pinMode(8, OUTPUT);
  pinMode(9, OUTPUT);
  pinMode(10, OUTPUT);
  pinMode(11, OUTPUT);
}

void loop()  {
  digitalWrite(8, LOW);
  digitalWrite(11, LOW);
  for (speed=0; speed<256; speed++){
    analogWrite(9, speed);
    analogWrite(10, speed);
    delay(10);      // wait for a second
  }
  for (speed=255; speed>0; speed--){
    analogWrite(9, speed);
    analogWrite(10, speed);
    delay(10);              // wait for a second
  }
  digitalWrite(8, HIGH);
  digitalWrite(11, HIGH);
  for (speed=0; speed<256; speed++){
    analogWrite(9, speed);
    analogWrite(10, speed);
    delay(10);              // wait for a second
  }
  for (speed=255; speed>0; speed--){
    analogWrite(9, speed);
    analogWrite(10, speed);
    delay(10);              // wait for a second
  }
}
```