MAX6675 Thermocouple Temperature sensor module

Technical Manual Rev 1r0

Thermocouples have been around forever and are a great way to measure temperature. They have a very large range, are robust and come in all kinds of lengths, varying tip configurations and a variety sheaths. The MAX6675 that make connecting a thermocouple to your Arduino an affordable breeze. The device measures the output of a K Thermocouple and provides the result to the Arduino via a SPI interface.

General Specifications:

Input supply voltage: 3.3V to 5VDC
Operating current: about 50mA
Measurement range: 0 to 1024 deg C
(32 deg F to 1875 deg F)
Measurement Resolution: +/- 0.25 deg C
(+/- 0.45 deg F)
Required sensor: K Thermocouple
Interface: SPI
PCB Dimensions: 32.5mm x 16mm

Figure 1: Major parts of MAX6675 Thermocouple Temperature sensor module.

Wiring Connections:

Gizduino to Temp. Sensor

+5V	**VCC**
GND	**GND**
D6	**SCK**
D5	**CS**
D4	**S0**

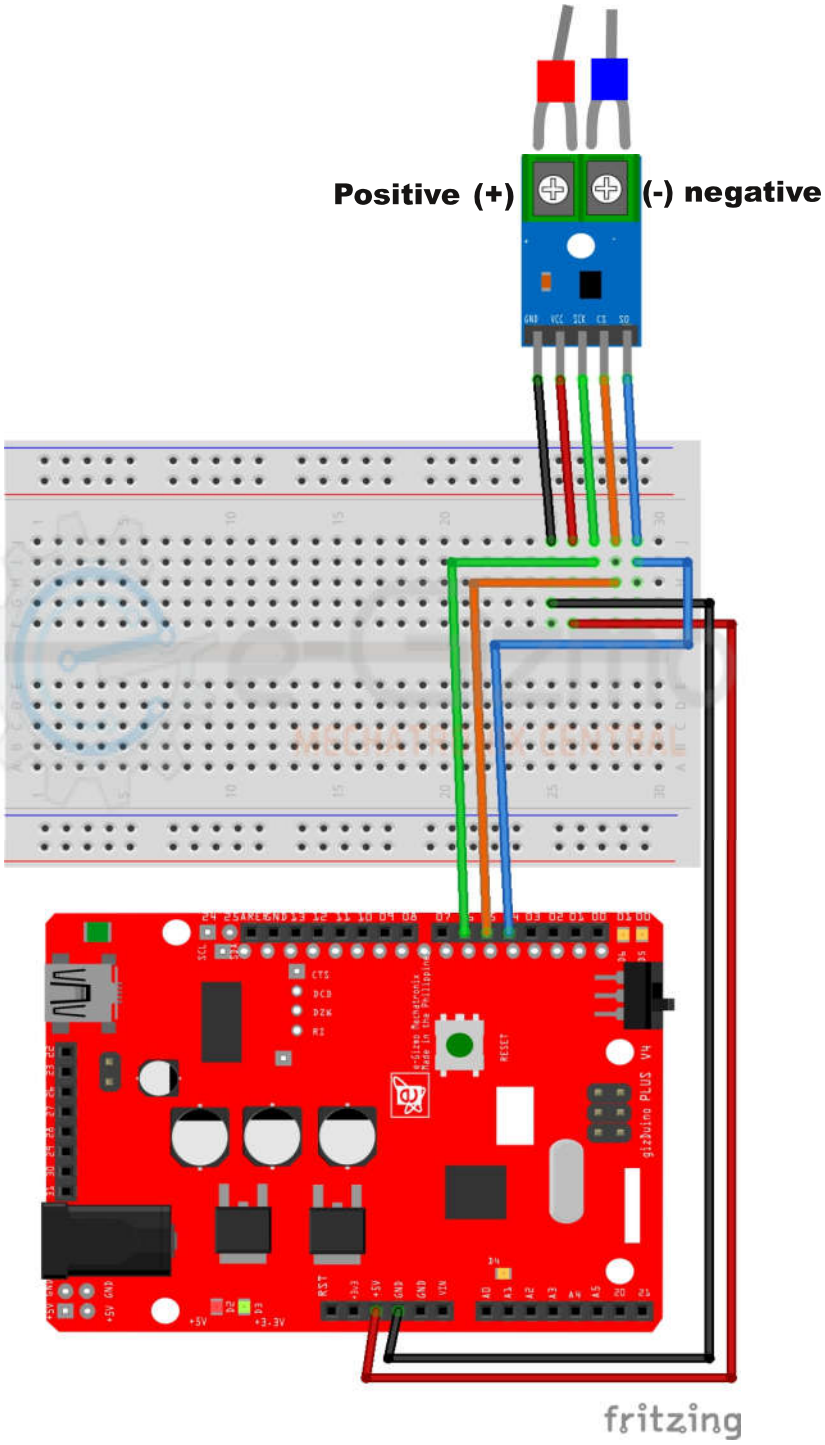

```
/*
e-Gizmo MAX6675 Thermocouple Temperature sensor

This sample sketch will show you the temperature and
Fahrenheit value of the sensor.

MAX6675 library required on this code.
Downloads:                    https://github.com/e-Gizmo/MAX6675-Thermocouple-Temperature-
sensor/blob/master/MAX6675.zip?raw=true

Modified by:
e-Gizmo Mechatronix Central
http://www.e-gizmo.com
August 15, 2017

Reference: http://www.ladyada.net/learn/sensors/thermocouple
*/

#include "max6675.h"

int DO = 4;
int CS = 5;
int CLK = 6;

MAX6675 thermocouple(CLK, CS, DO);

void setup() {
  Serial.begin(9600);
  Serial.println("MAX6675 TEST!");
  delay(500);
}

void loop() {
  // READOUT TEST
   Serial.print("C = ");
   Serial.println(thermocouple.readCelsius());
   Serial.print("F = ");
   Serial.println(thermocouple.readFahrenheit());
   delay(1000);
}
```