W5100 Ethernet Shield

*Changes (Components)

R14 - 33 ohms

R10 - R13 - 33 ohms

R18 - 2.2K ohms

Q1 - INK00001
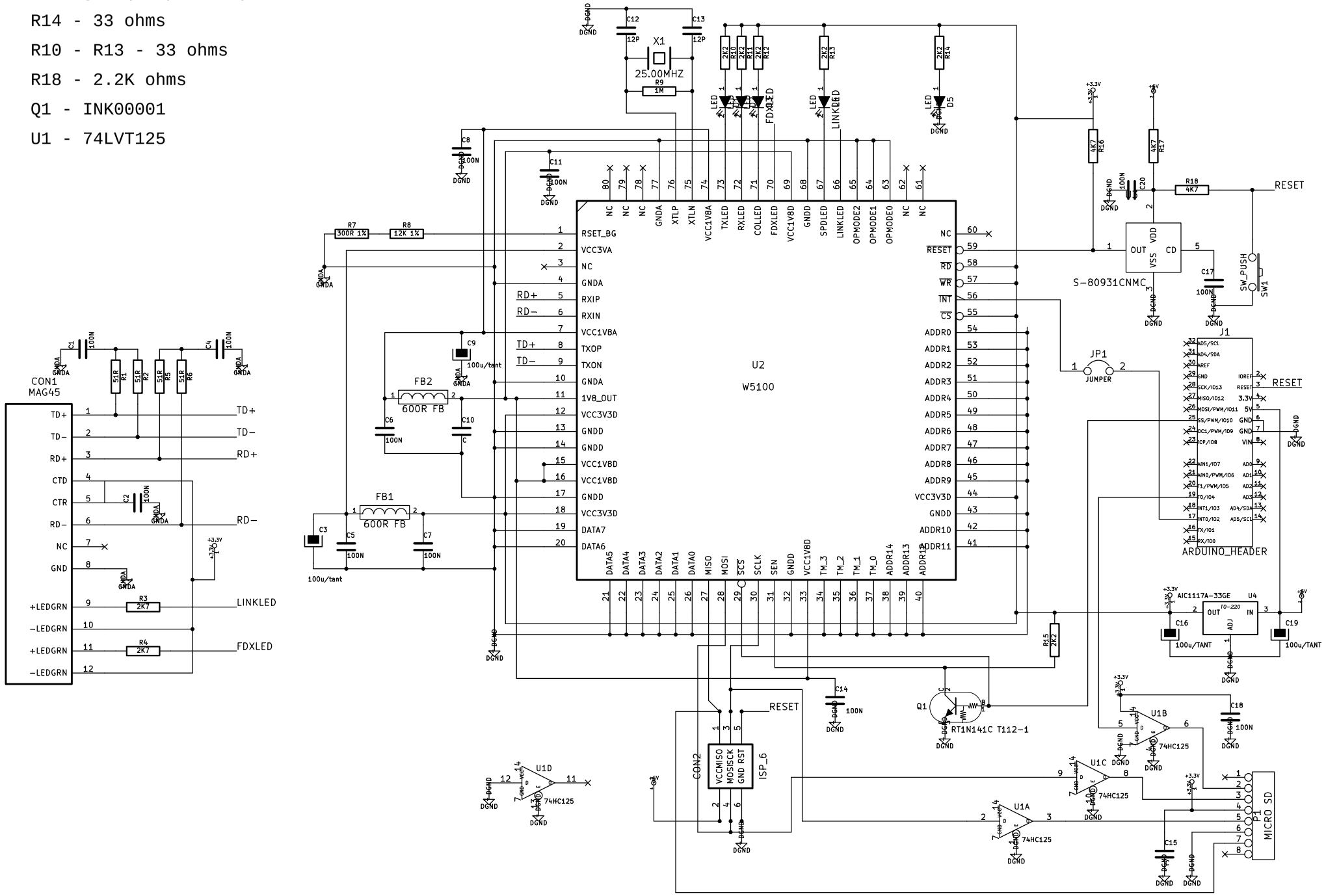
U1 - 74LVT125